Digital Electronic Circuits (EC2L004)

Lecture 17: Sequence Detectors

Learning Objectives

- Mealy Vs. Moore machines
- Sequence Detectors
  - Overlapping Vs Non-overlapping schemes

Mealy Vs. Moore Machines

- Moore: outputs depend on current state only
- Mealy: outputs may depend on current state and current inputs
- Mealy machines tend to have less states
- Moore machines are safer to use
  - Outputs change at clock edge (always one cycle later)
  - In Mealy machines, input change can cause output change as soon as logic is done – a big problem when two machines are interconnected – asynchronous feedback

Mealy Vs. Moore Machines

- Mealy machines react faster to inputs
  - React in same cycle – don't need to wait for clock
  - in Moore machines, more logic may be necessary to decode state into outputs – more gate delays after

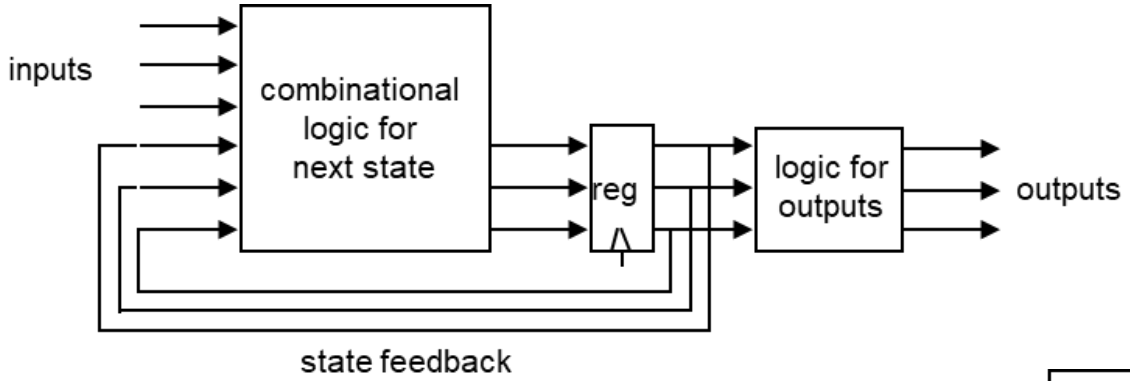

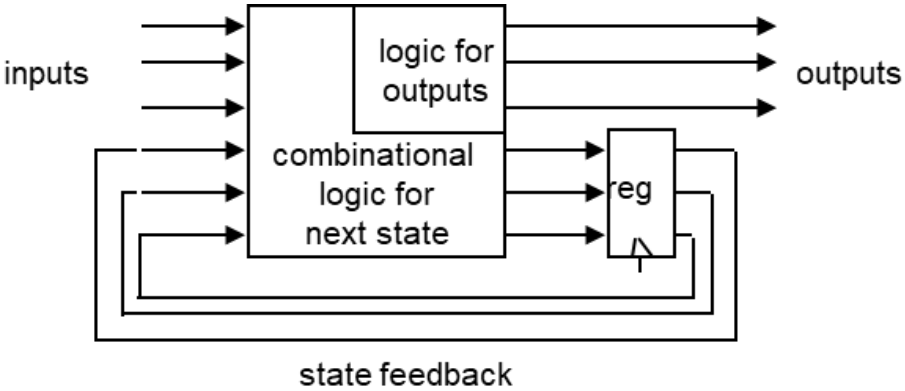

Mealy and Moore examples

- Recognize A,B = 0,1
  - Mealy or Moore

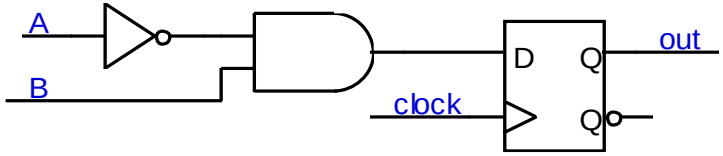

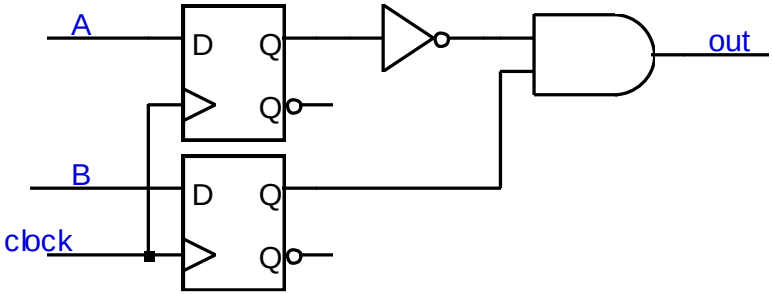

Mealy and Moore examples

- Recognize A,B = 1,0 then 0,1
  - Mealy or Moore?

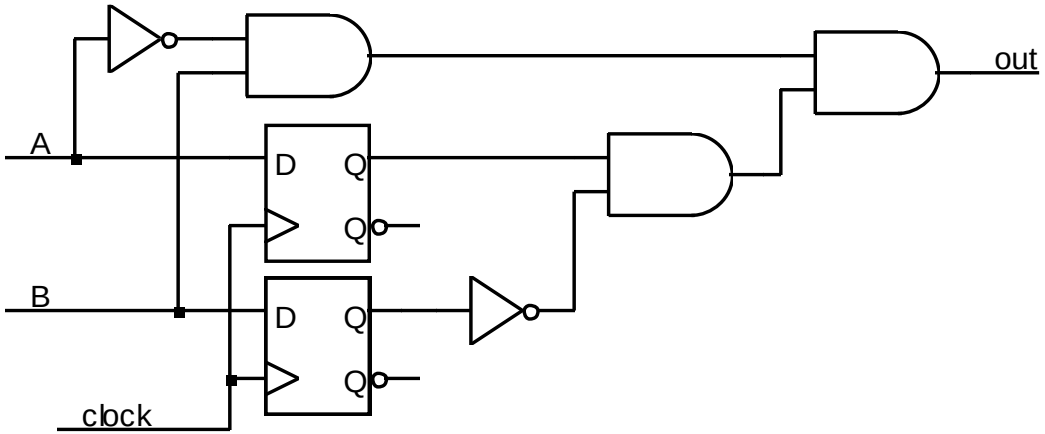

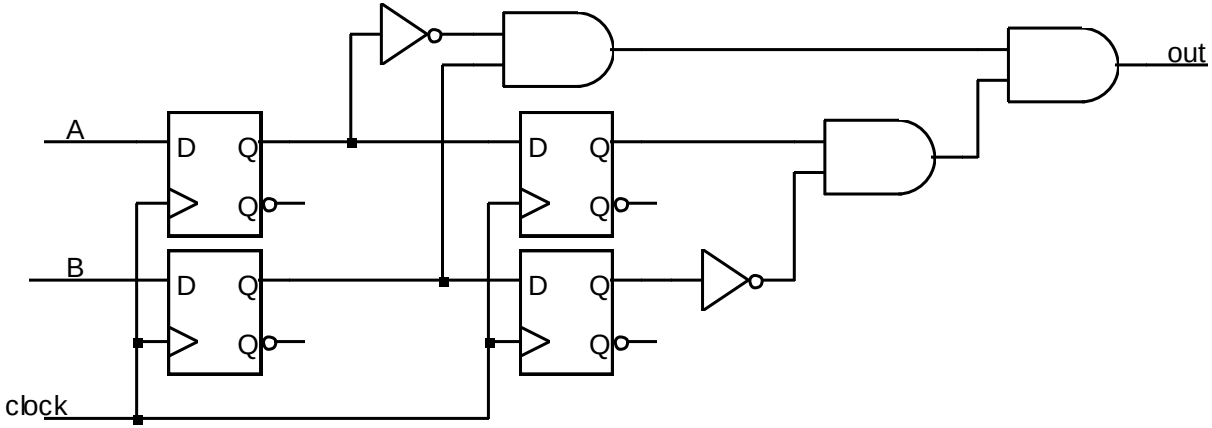

Sequence Detector

- Mealy machine, 101 sequence

- For non overlapping case

Input :0110101011001
Output:0000100010000

- For overlapping case

Input: 0110101011001

Output: 0000101010000

Sequence Detector

- 101 sequence Detector

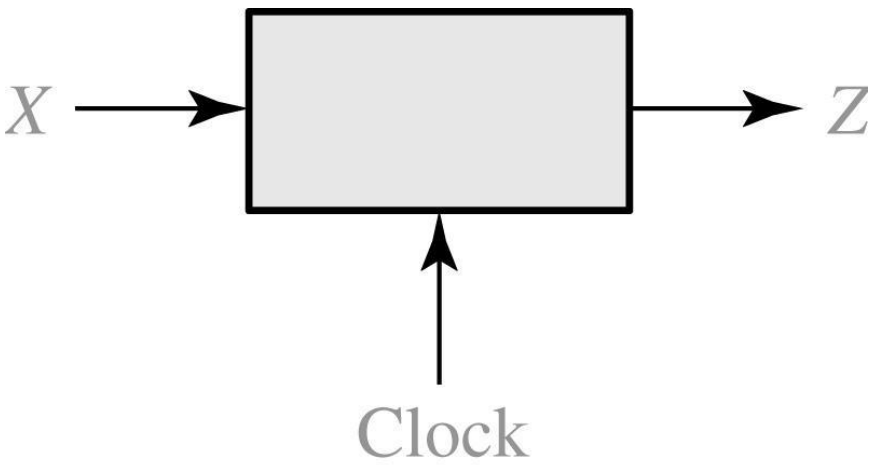

X	**=**	**0**	**0**	**1**	**1**	**0**	**1**	**1**	**0**	**0**	**1**	**0**	**1**	**0**	**1**	**0**	**0**
Z	**=**	**0**	**0**	**0**	**0**	**0**	**1**	**0**	**0**	**0**	**0**	**0**	**1**	**0**	**1**	**0**	**0**
(time:		**0**	**1**	**2**	**3**	**4**	**5**	**6**	**7**	**8**	**9**	**10**	**11**	**12**	**13**	**14**	**15)**

Design of 101 Sequence Detector

- State Diagram:

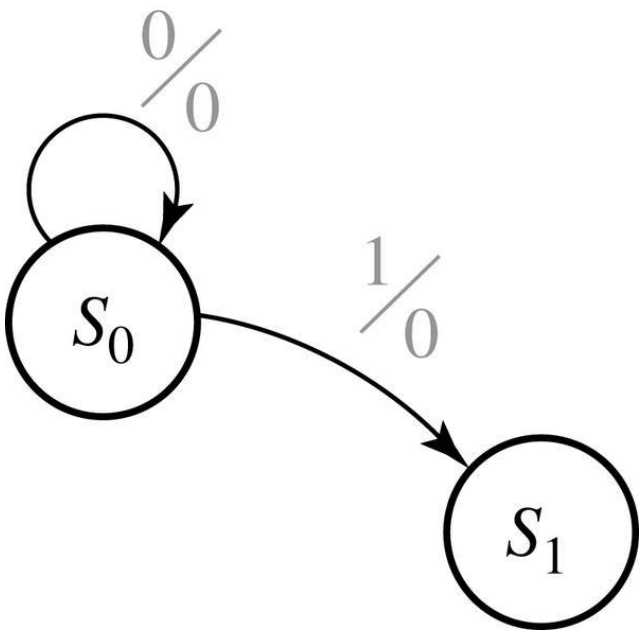

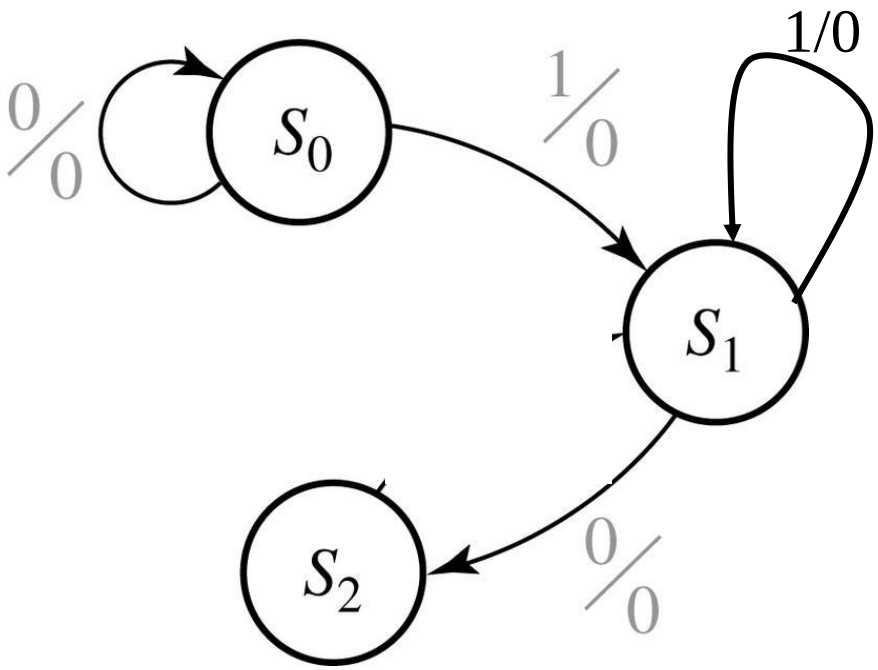

Design of 101 Sequence Detector

- State Diagram (final):

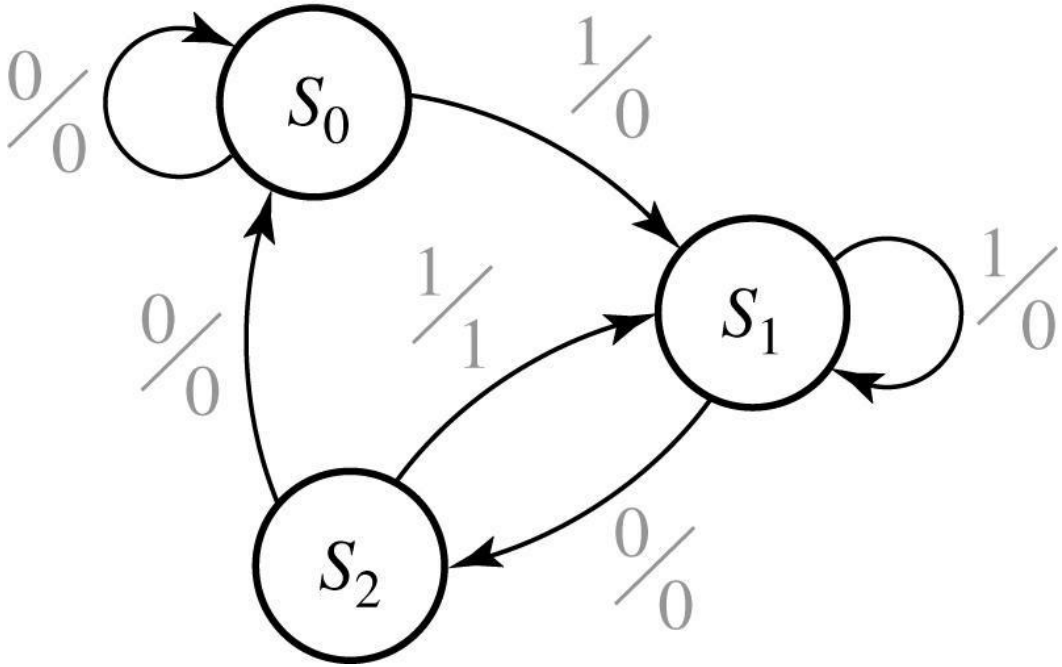

Design of 101 Sequence Detector

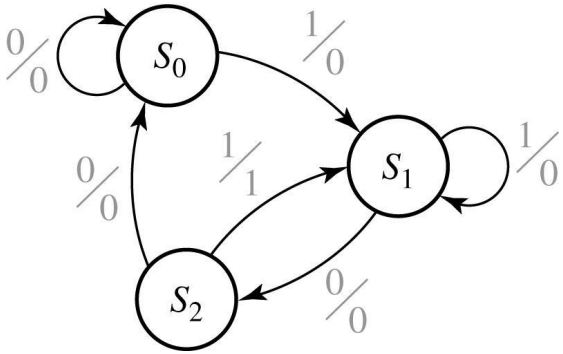

- State Table:

Present state	Next State X = 0	Next State X = 1	Present Output X = 0	Present Output X =1
S_0	S_0	S_1	0	0
S_1	S_2	S_1	0	0
S_2	S_0	S_1	0	1

- State Table with State Assignment:

AB	A^+B^+ X = 0	A^+B^+ X = 1	Z X = 0	Z X =1
00	00	01	0	0
01	10	01	0	0
10	00	01	0	1

Design of 101 Sequence Detector

- Derive Boolean Equations:

X \ A B	00	01	11	10
0	0	1	X	0
1	0	0	X	0

$$D_A = X'.B$$

X \ A B	00	01	11	10
0	0	0	X	0
1	1	1	X	1

$$D_B = X$$

X \ A B	00	01	11	10
0	0	0	X	0
1	0	0	X	1

$$Z = X.A$$

Design of Sequence Detector

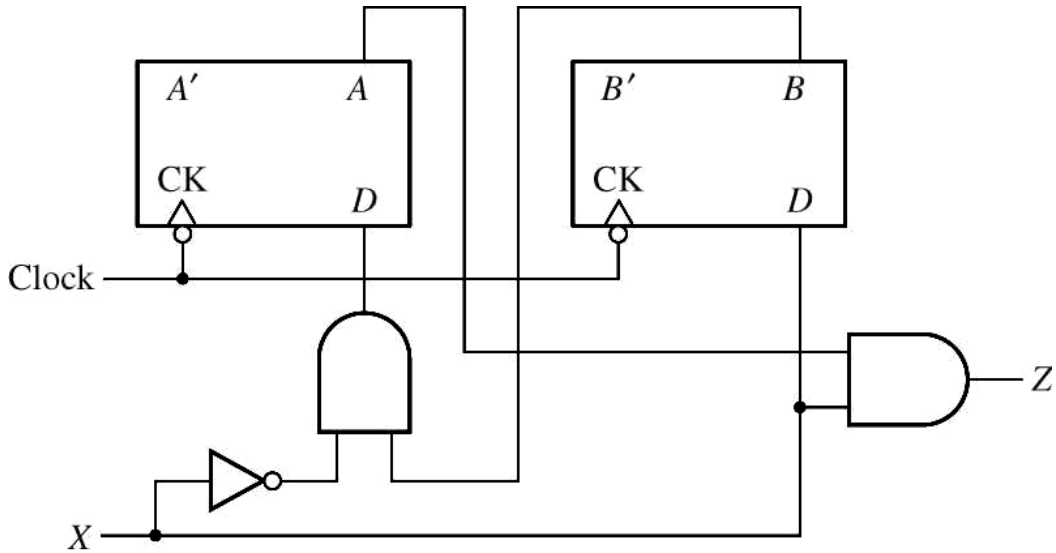

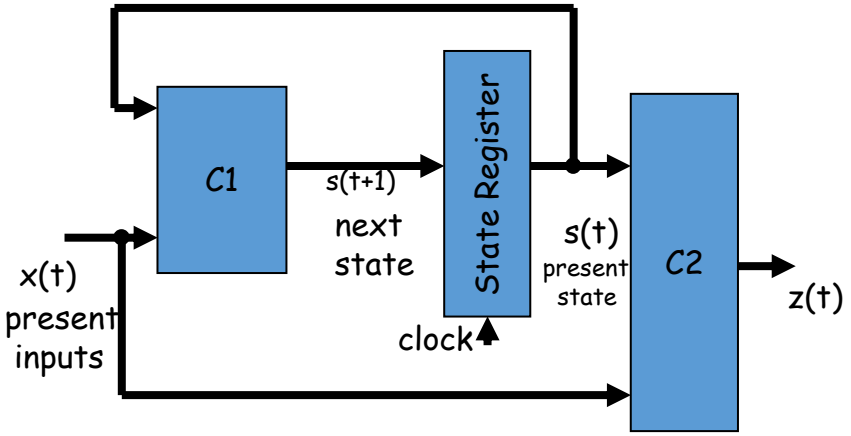

Compare with Typical Mealy Machine

Design of Sequence Detector

- A Moore Sequence Detector:

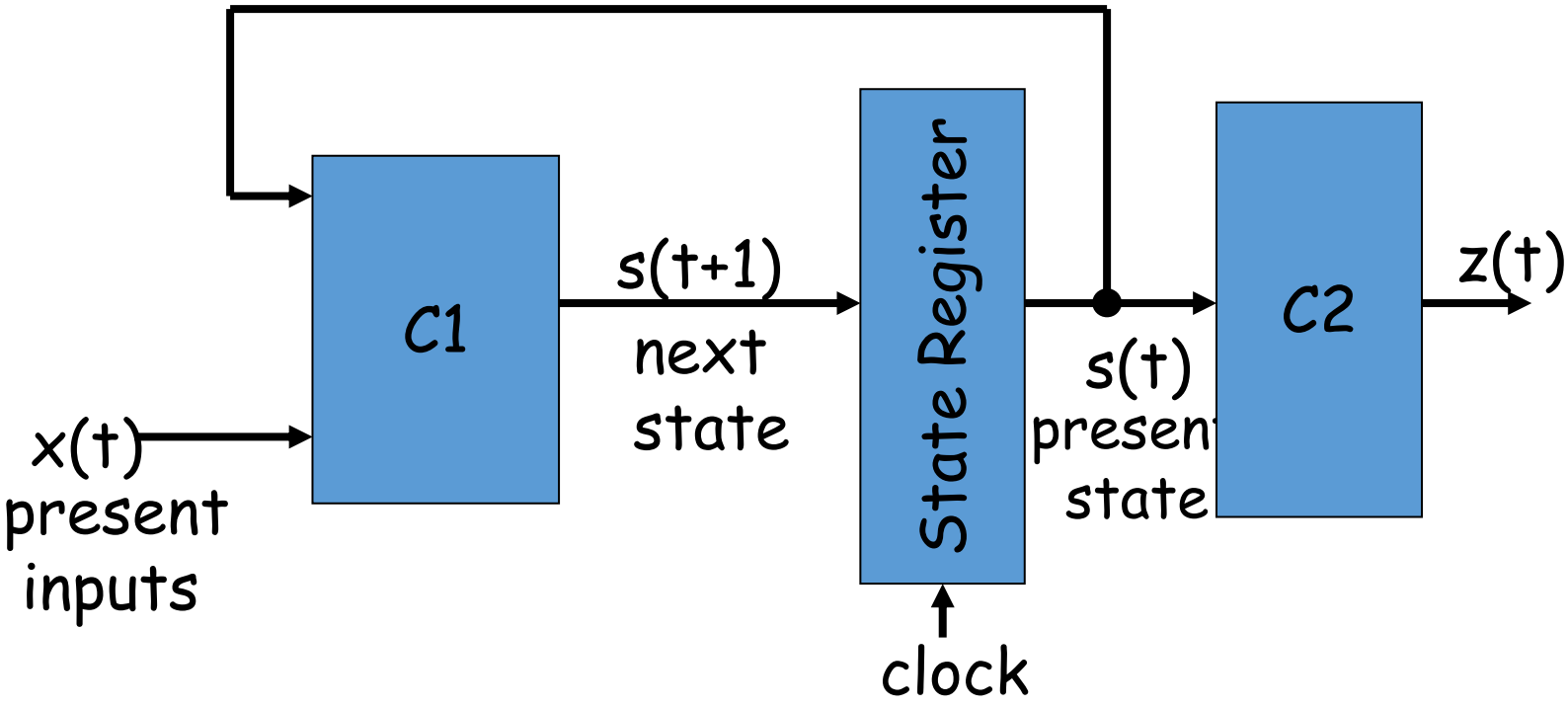

Sequence Detector

- 101 sequence Detector

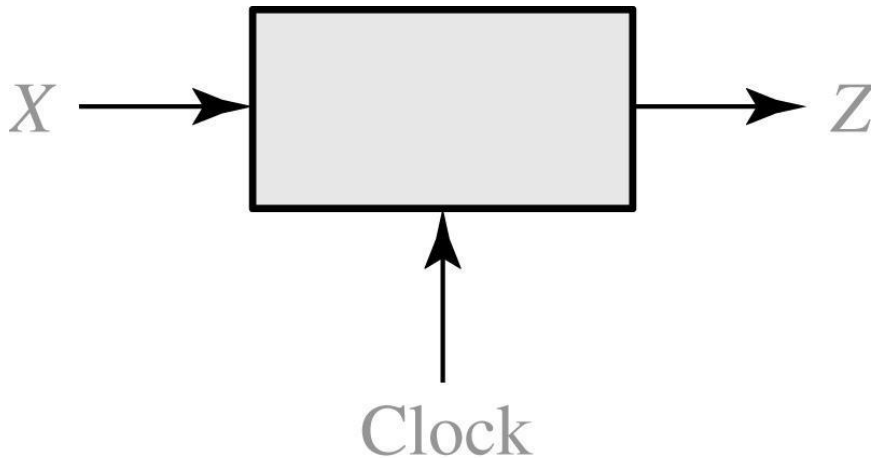

X =	**0**	**0**	**1**	**1**	**0**	**1**	**1**	**0**	**0**	**1**	**0**	**1**	**0**	**1**	**0**	**0**
Z =	**0**	**0**	**0**	**0**	**0**	**1**	**0**	**0**	**0**	**0**	**0**	**1**	**0**	**1**	**0**	**0**
(time:	**0**	**1**	**2**	**3**	**4**	**5**	**6**	**7**	**8**	**9**	**10**	**11**	**12**	**13**	**14**	**15)**

Design of a Sequence Detector

S_0: start

S_1: got 1

S_2: got 10

S_3: got 101

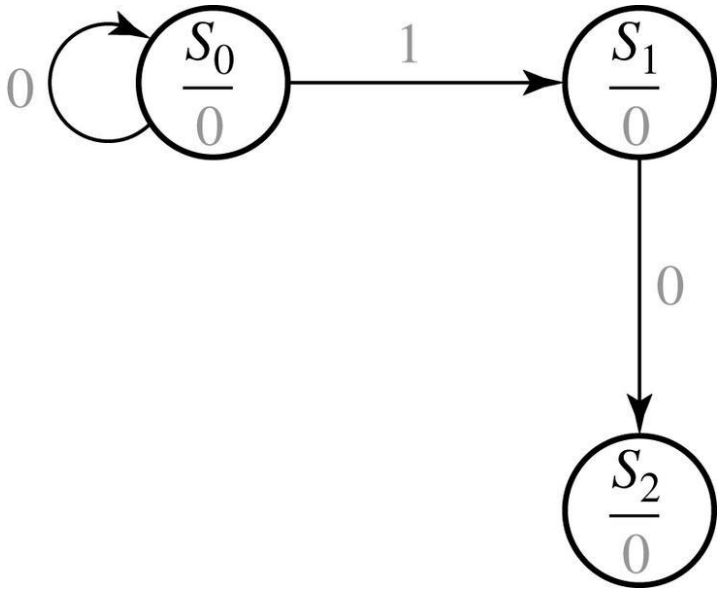

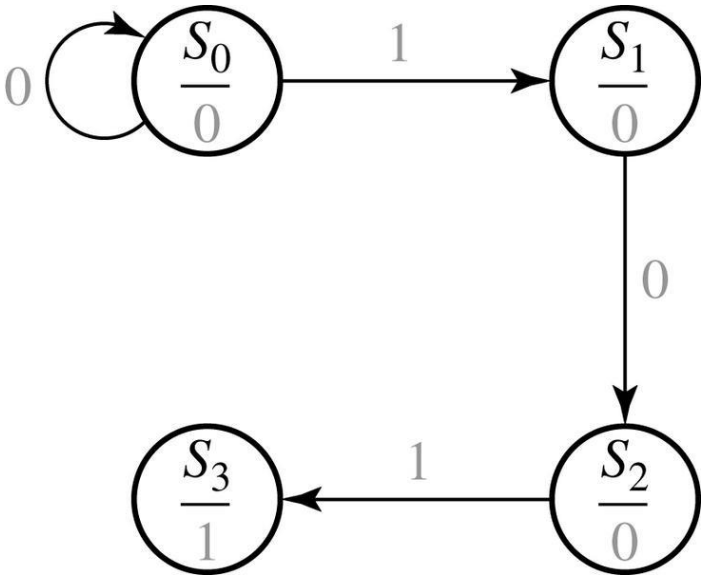

Design of a Sequence Detector

S_0: start

S_1: got 1

S_2: got 10

S_3: got 101

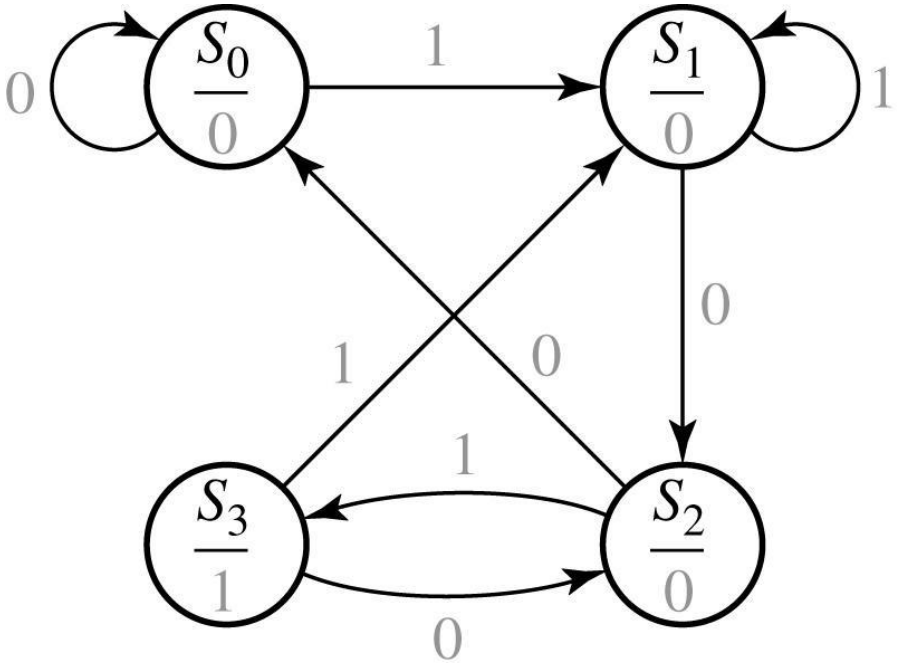

Design of a Sequence Detector

- State Table

Present state	Next State X = 0	Next State X = 1	Present Output (Z)
S_0	S_0	S_1	0
S_1	S_2	S_1	0
S_2	S_0	S_3	0
S_3	S_2	S_1	1

- Transition Table with State assignment

AB	D_A D_B A^+ B^+ X = 0	D_A D_B A^+ B^+ X = 1	Z
00	00	01	0
01	11	01	0
11	00	10	0
10	11	01	1

Design of a Sequence Detector

X \ A B	00	01	11	10
0	0	1	0	1
1	0	0	1	0

$$D_A = \bar{X}\bar{A}B + XAB + \bar{X}A\bar{B}$$

X \ A B	00	01	11	10
0	0	1	0	1
1	1	1	0	1

$$D_B = \bar{A}B + X\bar{B} + A\bar{B}$$

$$Z = A\bar{B}$$

References

- Disclaimer: I don’t own all the slides, these slides are copied and adopted from various public resources available on the internet.

Thank you!!!